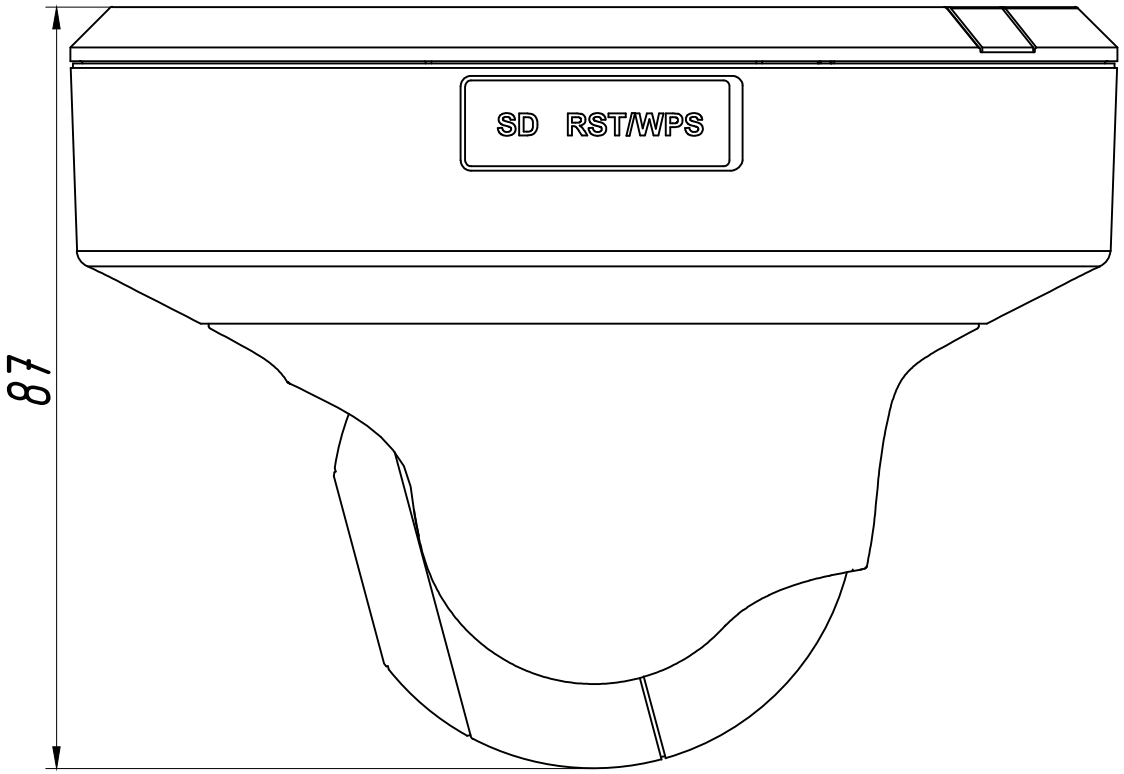
SD RST/WPS
87

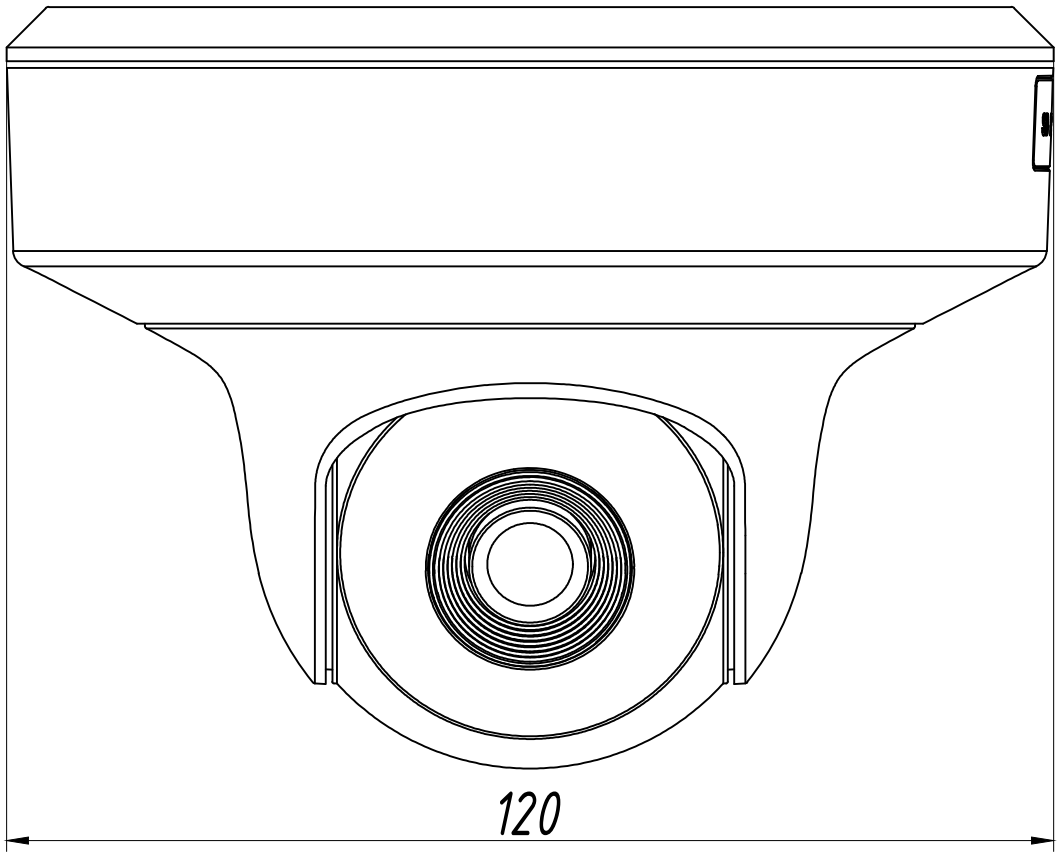
120